DIMENSIONS:	
A	3.000" ±0.063
B	2.470" ±0.125
C	2.500" ±0.063
D	2.500" ±0.063
E	2.250" ±0.063
F	2.813" ±0.063
G	0.203" X 0.375" ±0.015

APPROX. WEIGHT: 3LBS.

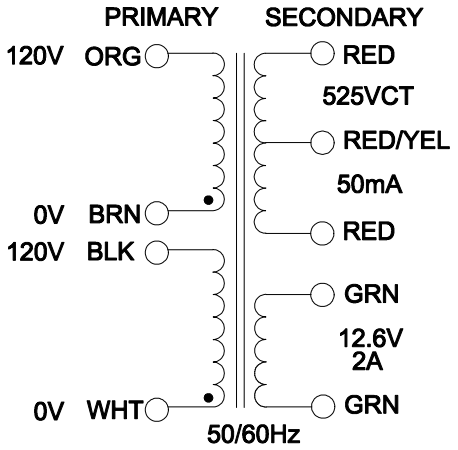

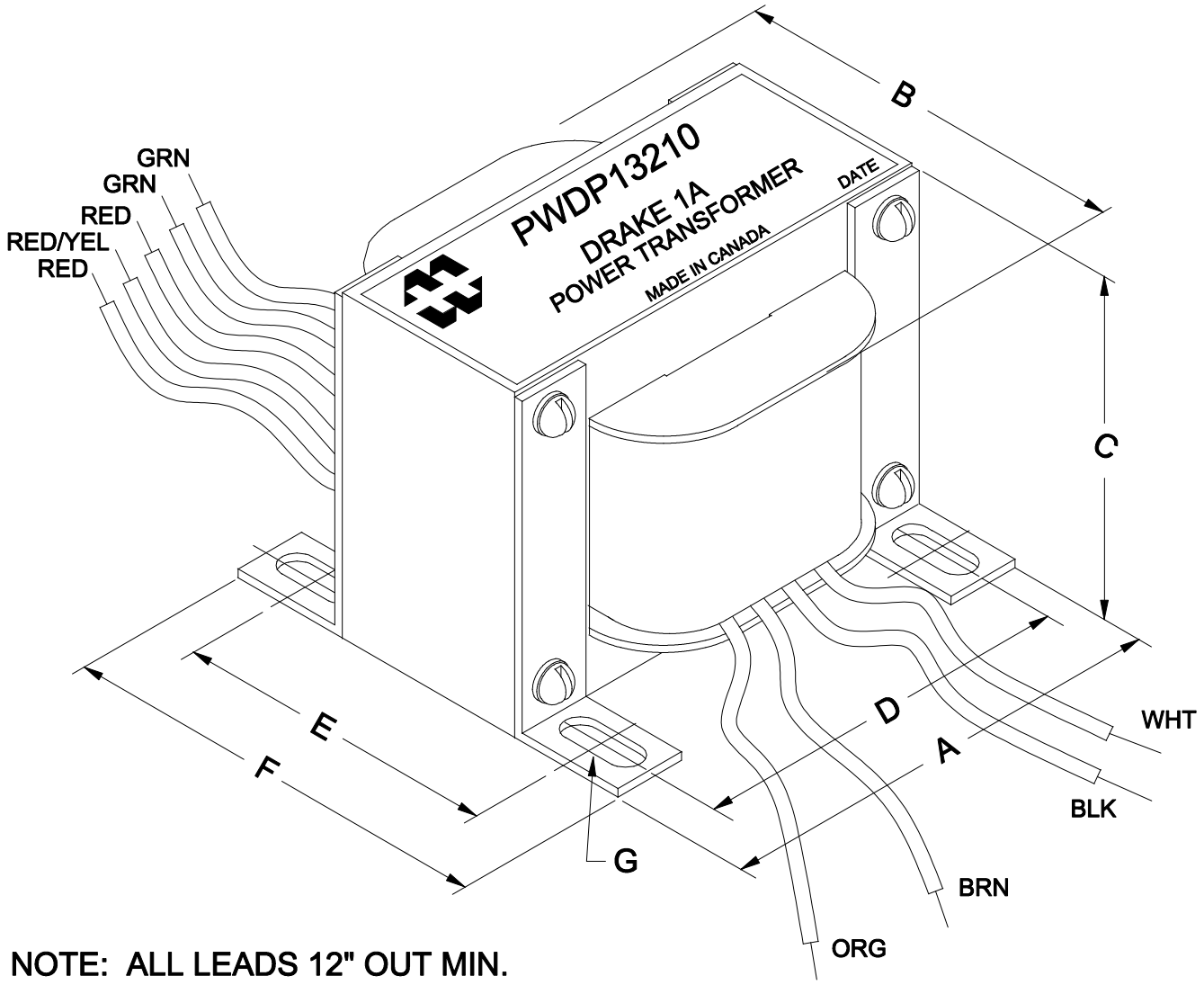

NOTE: ALL LEADS 12" OUT MIN.

HAMMOND MANUFACTURING T.M.

ELECTRONIC DIVISION
52 RANKIN PLACE,
WATERLOO, ONTARIO, N2J 3Z5
PH # (519) 886-6181
FAX # (519) 886-9540

TITLE: DRAKE 1A

NO	DATE	REVISION	
0	11/18/20	RELEASED.	C.I.

DWG. BY: C. ILIE
DATE: 11/18/20
DIM IN(X)MM( )

PWDP13210